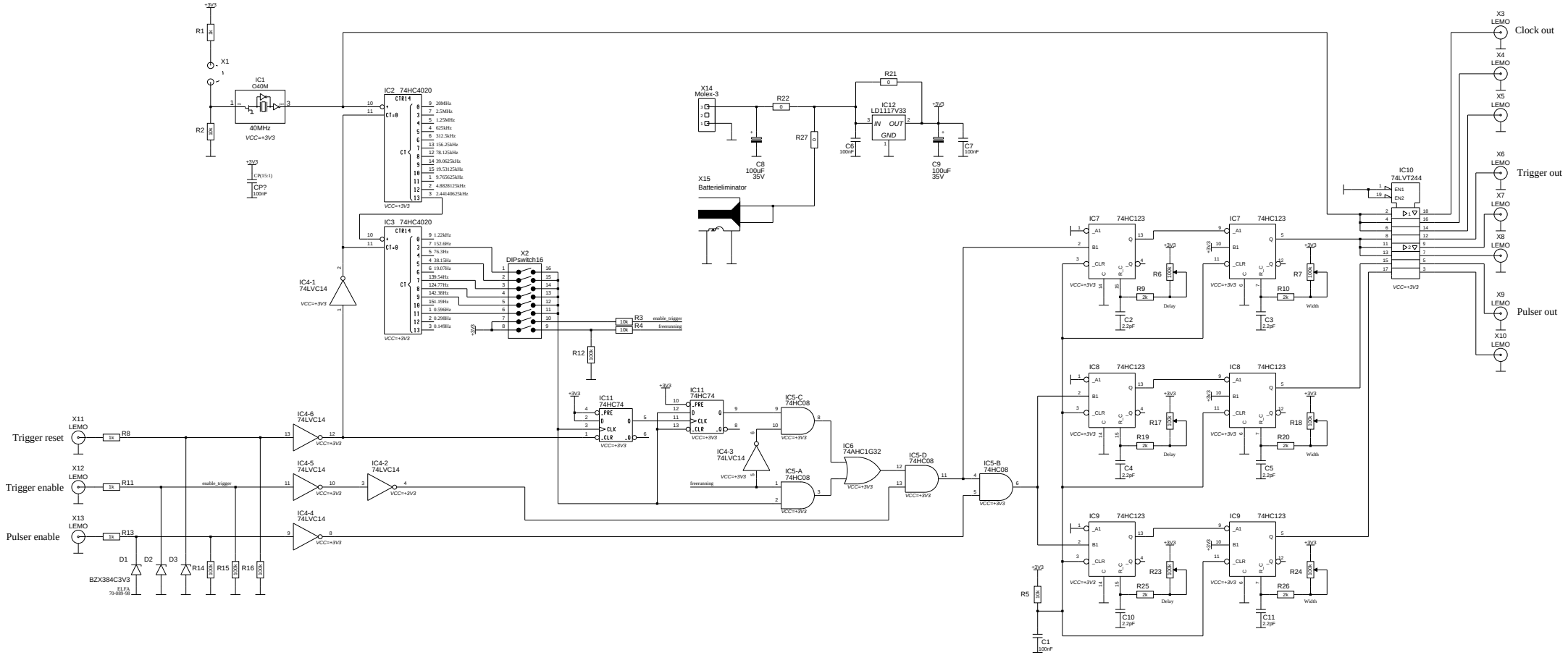
+3V3
R1 1k
X1
IC1
O40M
40MHz
VCC=+3V3
R2 10k
CP?
100nF
IC2 74HC4020
IC3 74HC4020
IC4-1
74LVC14
X2
DIPswitch16
R3 10k
R4 10k
enable_trigger
freerunning
R12 100k
X14
Molex-3
R22 0
R21 0
R27 0
IC12
LD1117V33
IN OUT
GND
C6 100nF
C7 100nF
C8 100uF 35V
C9 100uF 35V
X15
Batterieliminator
X3 LEMO
Clock out
X4 LEMO
X5 LEMO
X6 LEMO
Trigger out
X7 LEMO
X8 LEMO
X9 LEMO
Pulser out
X10 LEMO
IC10
74LVT244
IC7 74HC123
IC8 74HC123
IC9 74HC123
R6 100k
R7 100k
R9 2k
R10 2k
R17 100k
R18 100k
R19 2k
R20 2k
R23 100k
R24 100k
R25 2k
R26 2k
Delay
Width
C2 2.2pF
C3 2.2pF
C4 2.2pF
C5 2.2pF
C10 2.2pF
C11 2.2pF
R5 10k
C1 100nF
IC11
74HC74
IC4-3
74LVC14
IC5-C
74HC08
IC5-A
74HC08
IC6
74AHC1G32
IC5-D
74HC08
IC5-B
74HC08
IC4-6
74LVC14
IC4-5
74LVC14
IC4-2
74LVC14
IC4-4
74LVC14
X11 LEMO
Trigger reset
R8 1k
X12 LEMO
Trigger enable
R11 1k
X13 LEMO
Pulser enable
R13 1k
D1
D2
D3
BZX384C3V3
ELFA
70-089-98
R14 100k
R15 100k
R16 100k
VCC=+3V3