520

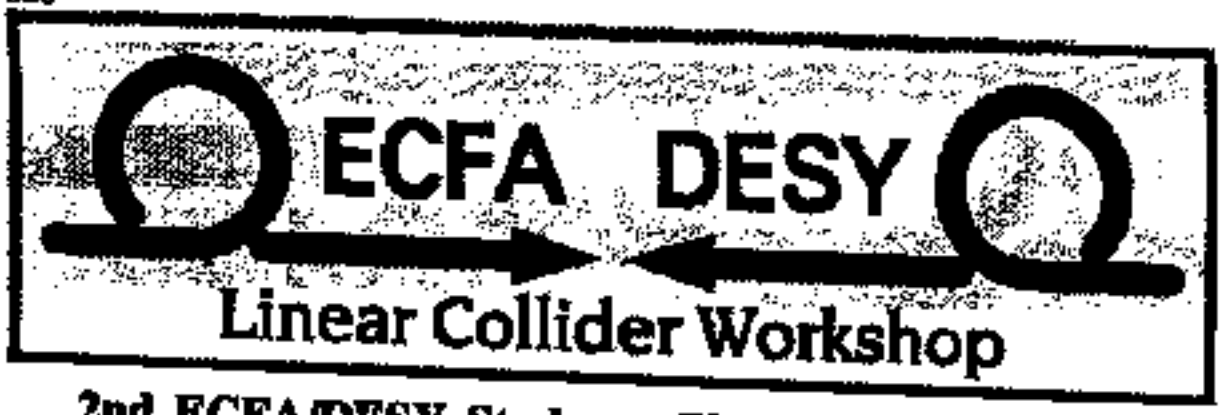

2nd ECFA/DESY Study on Physics and Detectors for a Linear Electron-Positron Collider

LAL - Orsay - France, April 5-7, 1998

Date : April 7, 1998 - 12:00

Group 3 - Simulation

leader's talk : M. Poppe

Detector Simulation for LC98

M. Pohl, ETH Zürich

April 5-7, 1998

- Do we need detector simulation and for what?
- Which detector(s) do we simulate?
- Simulation tools
- Input interface
- Output interface

VERY LIVELY DISCUSSION YESTERDAY!

S. Aïd
J. Timmermans
K. König
R. Hawkings
M. Gruwé
I. Brock
Y. Sirois
J.C. Brient
X. Jusk
T. Behnke
E. Elsen
P. Checchia
M. Battaglia
H.U. Martyn
J. Steuerer
G. Troncon
M. Pohl
G. Blair
⋮

If you think you should be on this list: email to
M. Pohl @ cern.ch
G. Blair @ rhbnc.ac.uk

SINCE EVERYONE IS VICTIM OF SIMULATION NOW AND THEN... BUT NOT TOO MANY AUTHORS.

Do we need detector simulation?

Detector simulation vs parametric MC:

Pros:

- **Parametric MC does not simulate granularity (calorimeters)**
- **Difficult to implement variations of resolution with phase space (conversion, multiple scattering, dead material etc.)**
- **Correlations generally ignored (double track resolution, lepton isolation etc.)**
- **Performance estimates generally optimistic**

Cons:

- **CDR detector is idealistic anyway**
- **No holes, no cracks, no supports, no cables**
- **Detector simulation is useless when there is no reconstruction**
- **Performance estimates generally optimistic**

Detector simulation vs parametric MC

SIMDET:

- update resolution fcts, acceptance, granularity
- implement energy flow
- unify input & output interface

My opinion: à la GEANT

- Need simulation to verify and refine parametric MC
- Need simulation to study granularity and coverage for selected physics cases
- Need simulation to study trigger requirements and trigger detectors
- Should aim for full simulation of a simple CDR detector
- Flexible enough to include (limited amount of) new ideas
- Used as a tool for physics studies, supplementing parametric MC studies

HYBRID: 'PICTURE PHILOSOPHALE'

- general, even for sampling calo.?
- accurate for e.m. showers ?

Detector simulation tools

GEANT 3:

- Program available
- Expertise available
- Previous CDR detector implementation available
- More complete detector description under way
- Limited lifetime

GEANT 4:

- Modern concept (OO)
- Much more sexy
- Available for test end of 1998(?)
- No expertise, no model
- Long lifetime

My opinion:

- For this round, use GEANT 3 as production tool
- Set up subgroup to study GEANT 4
- Live with some amount of wasted effort

GEANT volume tree

LC96/97 study:

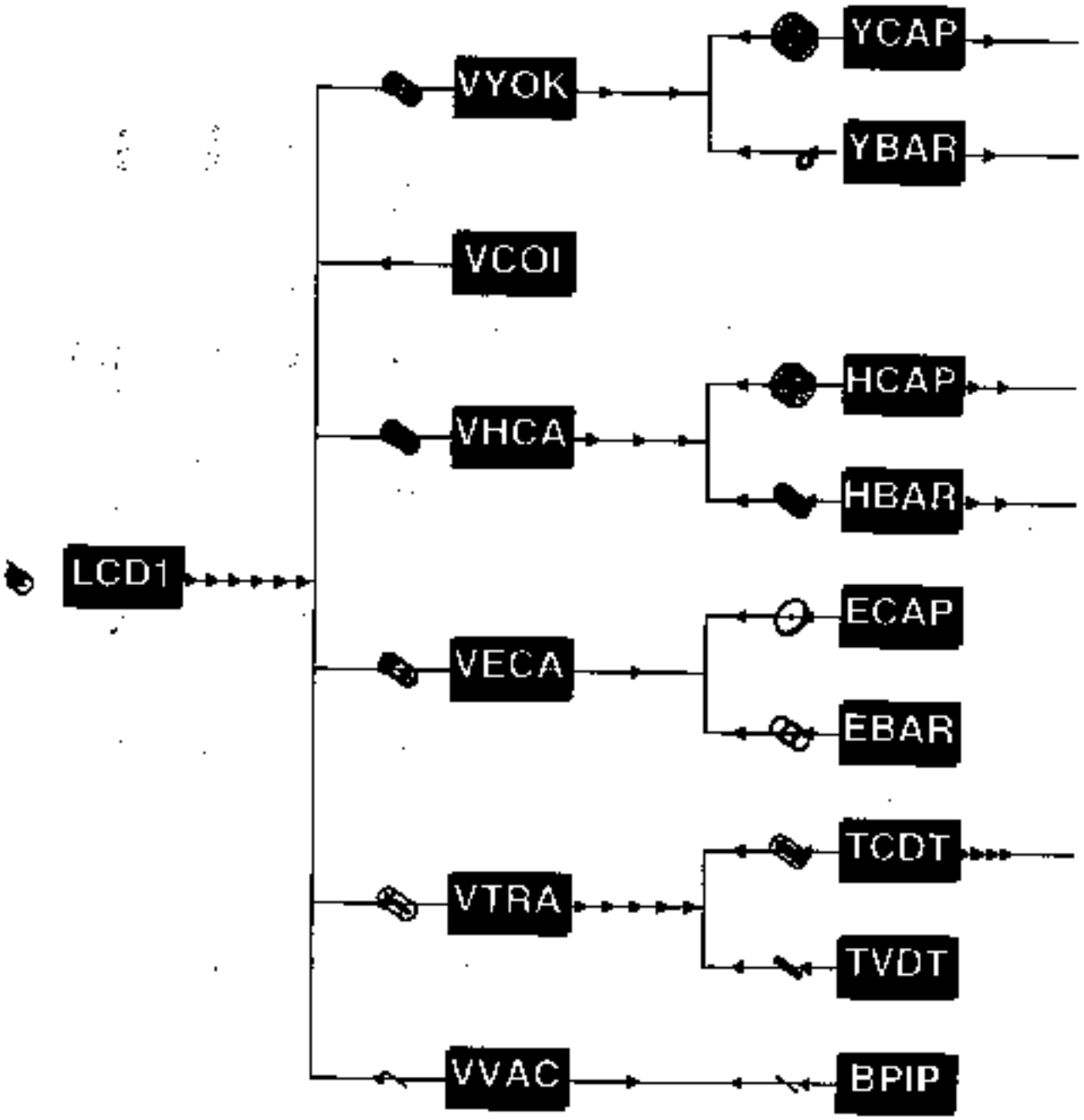

Victims:

'VACUUM': M. Bellaglia

'TRACKER': VDET pixel M. Bellaglia
CCD D.N.

Intermediate: D.N.

TPC: D.N.

'ECAL/HCAL': P. Checchia
G. Blair

'INNER MUON': S. Arcelli

'LUMI/TAG': M. Piccolo

COORDINATED & INTEGRATED BY G. BLAIR

Detector description strategy

***Free bore* concept:**

- **Identify major subsystems**
  - **Vacuum chamber: beam pipe, masks**
  - **Tracker: inner, intermediate, main, forward**
  - **Electromagnetic calorimeter**
  - **Hadron calorimeter**
  - **Magnet**
  - **Instrumented yoke**
- **Assign simple shape with overall dimensions (free bore)**
- **Find an subsystem expert to specify/implement contents:**
  - **geometry**
  - **materials (composites)**
  - **active elements**
  - **digitisation model (resolution)**
- **Integrate at the top level (no overlap)**
- **Good model of how to build the detector**

GEANT for LC98

LC96/97:

- Main subsystems still valid
- All details out of date
- No digitisation
- No input and output interface

LC98:

- Review geometry and materials
- Implement much richer substructure
- Implement (rudimentary) digitisation
- Define and Implement input interface to generators
- Define and Implement output Interface to (rudimentary) pattern recognition and reconstruction
- Missing detectors: Lumi-mon., beam pipe cal., forward tracker, fwd. tracker, instrum. yoke

Pattern recognition and reconstruction

Pattern recognition:

- **Tracks: cheat**
- **Calorimeters: generic cluster algorithm**
- **Matching: geometric and kinematic algorithm**

Reconstruction:

- **Energy flow objects:**
  - **Photon: lone electromagnetic cluster**
  - **Neutral hadron: lone hadronic cluster**
  - **Electron: track + matched em cluster**
  - **Charged hadron: track + matched em cluster + matched hadronic cluster**
  - **Muon: track + matched em cluster + matched hadronic cluster + track in yoke**

Energy flow objects

Energy flow approach:

- **Optimise object classification**
- **Optimise E/p measurement on object class level**
- **Automatically optimises visible and missing energy and momentum measurement**
- **Little dependence of classification and E/p measurement on the physics process**
- **Expertise available at LEP/HERA**

Input and output interface

Input via Formatted Records:

- data volume ?
- generators' group to specify

Input via HEPEVT common: or Lund comm.

```
+KEEP, NMXHEP
       PARAMETER (NMXHEP=2000)
+KEEP, HEPEVT
+SEQ, NMXHEP
       COMMON/HEPEVT/NEVHEP,NHEP,
      &ISTHEP(NMXHEP),IDHEP(NMXHEP),
      &JMOHEP(2,NMXHEP),JDAHEP(2,NMXHEP),
      &PHEP(5,NMXHEP),VHEP(4,NMXHEP)
       DOUBLE PRECISION PHEP,VHEP
       SAVE /HEPEVT/
```

➨ Generators' Group? to standardize

Output in an analogous structure? Yes!

Any standards from parametric MC's? Not yet!

➨ Simulation Group to standardize

REQUEST: TOGETHER WITH GENERATORS'

- CREATE CENTRAL REPOSITORY
  - PROGRAMS, GENERATORS & SIMULATIONS
  - META DATA
  - GENERATOR OUTPUT
  - SIMULATION OUTPUT
- AT DESY
- DISK SPACE NEEDED (10..100 GB?)
- MAN POWER NEEDED (½ FTE)
- CPU POWER NEEDED IF DATA REACH LIMIT OF TRANSPORTABILITY